CATV

1550nm Optical Amplifier User Guide

Warm Suggestion: Remember connect the EDFA's input and output optical connector first, and then turn on the power.

Content

1U Optical Amplifier user guide

This manual is used in 2016 style optical node equipment, mainly expounds the performance characteristics of the equipment, technical parameters, etc.. Please read this manual carefully before use, if you have any questions, please contact the company.

Special tips

This node equipment is a strong technical professional equipment, its installation and commissioning must be carried out by professional and technical personnel, and carefully read the manual before operation, so as not to damage the equipment due to false operation, or cause accidental injury to the operator.

When the device works, the optical fiber adapter which is located in the rear panel can not be visible in the optical fiber adapter. The optical signal output port is not aligned with the human body, and the optical output port can not be directly looked directly at the eye, so as to avoid permanent damage to the human body and the human eye!!!

Equipment in addition to the work before, should first confirm that the system rack and power sockets grounding terminal has a reliable grounding (grounding resistance should be less than 4Ω), in order to avoid damage to the static laser devices, and to prevent the body from electricity and causing damage to the human body.

In order to ensure long-term stable operation of the equipment, in the grid voltage instability or poor waveform area, it is recommended for the user to configure a dedicated AC regulated power supply, the conditions of the user can be configured with an uninterrupted power supply (UPS) system in the environment is too large or poor computer room environment (equipment ideal working environment temperature is 25 degrees Celsius), it is recommended for the equipment to configure special air-conditioning equipment, to improve the working environment of equipment.

1. Product structure

1.0 Product overview

The equipment is designed to meet the requirements of the front-end computer room equipment intensive installation and development and design of the CATV integrated node.

The double power supply hot backup structure, which is dedicated to the server, can effectively improve the reliability of the system with the intelligent temperature control system controlled by the microcomputer.

The device is equipped with a standard RJ45 network communication interface (built-in responder), 10/100Mbps adaptive rate, can easily achieve remote network management centralized monitoring, is to build a high-performance two-way HFC broadband network of the first choice.

Can be equipped with optional power supply: single or dual power supply.

Can be equipped with modules: dual module combination or single module independence.

2.0 Product feature

Compact design, 1U rack can be achieved dual module integration.

Configuration flexible, on-demand collocation.

32 bit ARM architecture of the control unit, the robust CPU can be real-time monitoring of each module within the framework of the operating parameters.

The utility model is convenient and practical, and can adjust the level and the slope of the target module through the front panel function button or the network management system.

The structure of the double power supply is used to match the intelligent temperature control system which is controlled by the microcomputer, which can improve the reliability of the system.

Equipped with the standard RJ45 network management communication interface, it can easily realize the centralized monitoring and control of remote network management.

3.0 Diagram

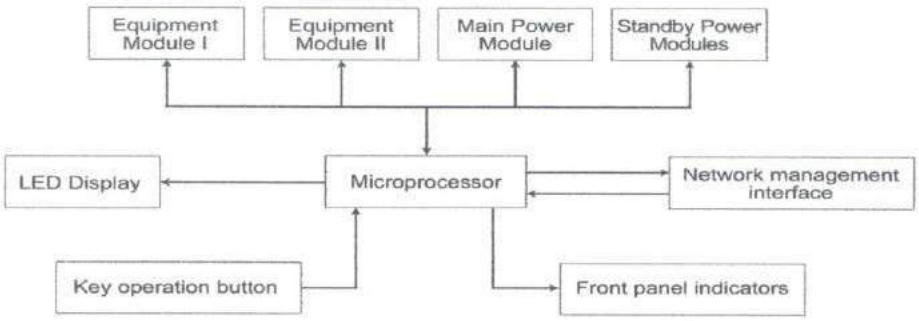

4.0 Pannel description

Pump laser switch: this switch is a lock switch, when the key is used to transfer the lock to the OFF position, the pump laser will be switched off when the key is directed to the ON

USB : This port for the USB micro interface, serial communication, for the debugging interface.

RJ45 : Network interface, you can through this network to connect the network management, the device access to the network management, equipment model for Platform_1U.

Display: display device menu

Key :

↩ : Cancel
▲ : Move up
▼ : Move down
↵ : Shift

Lamp :

Power : Double power supply for the green light when a single power supply for the orange light

MOD1 : When the lamp is bright, the module is in the presence of a module. When the lamp is green, the module is working normally.

MOD2 : When the lamp is lit in the presence of two modules, when light is green Module II is working properly, there is a red alert when the module II.

Temp: This lamp is a temperature indicator, a temperature alarm occurs when red, green as normal.

Alarm : Warning lights green when the device does not normally exist alarms appear red when the alarm equipment.

5.0 Menu Description

1, the default boot display interface for the main parameters of each module. The first acts of a module device parameters, and the second two acts module device parameters.

2, (* 1) status of the module 1 jump interface, press the Enter key to enter this sub-menu you can view a related module parameters. (See description of each module)

3, (* 2) for the module status 2 jump interface, press the Enter key to enter this sub-menu you can view two related module parameters. (See description of each module)

4, (* 3) interface module is set to jump 1, press the Enter key to enter this sub-menu can be set to block an amount of viewing and changing operation. (See description of each module)

5, (* 4) interface module is set to jump 2, press the Enter key to enter this sub-menu you can set the amount of the second module to view and change operation. (See description of each module)

6, (* 5) Network parameter setting, containing the machine IP, gateway, mask, etc. to view and modify.

7, (* 6) The system state, containing the power supply voltage, chassis temperature parameters.

8, (* 7), system information, display type device inside the module.

In the sub-menu item in the display indicates the tail with a * You can set this item, click on the OK button after * disappear, the corresponding parameter item starts blinking, you can press the upper or lower by changing key parameters, press Enter to finish.

6.0 Network configuration instructions

The default network parameters of the device is
IP : 192.168.0.160
Mask : 255.255.255.0
Gateway : 192.168.0.1

7.0 Equipment Type

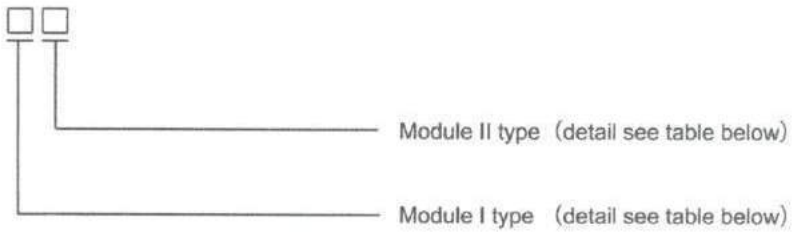

Module referred to correspondence table

RF Amplifier	FA			
Forward Optical Receiver	FR			
Upstream optical transmitter	RT			
RF Switches	R S			
Direct Modulated Optical Transmitter	LT			
EDFA	EA			
Optical Switch	OS			

2. Module Description

Optical amplifier module

1.0 Model Description

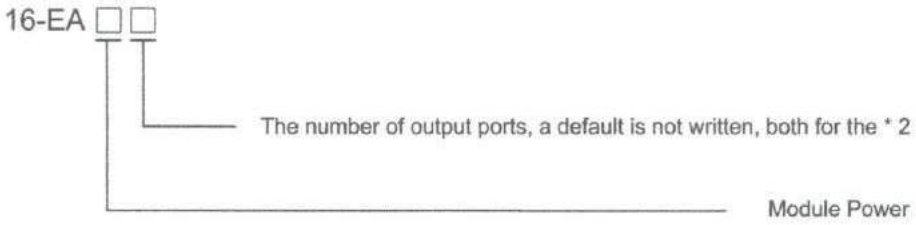

2.0 Diagram

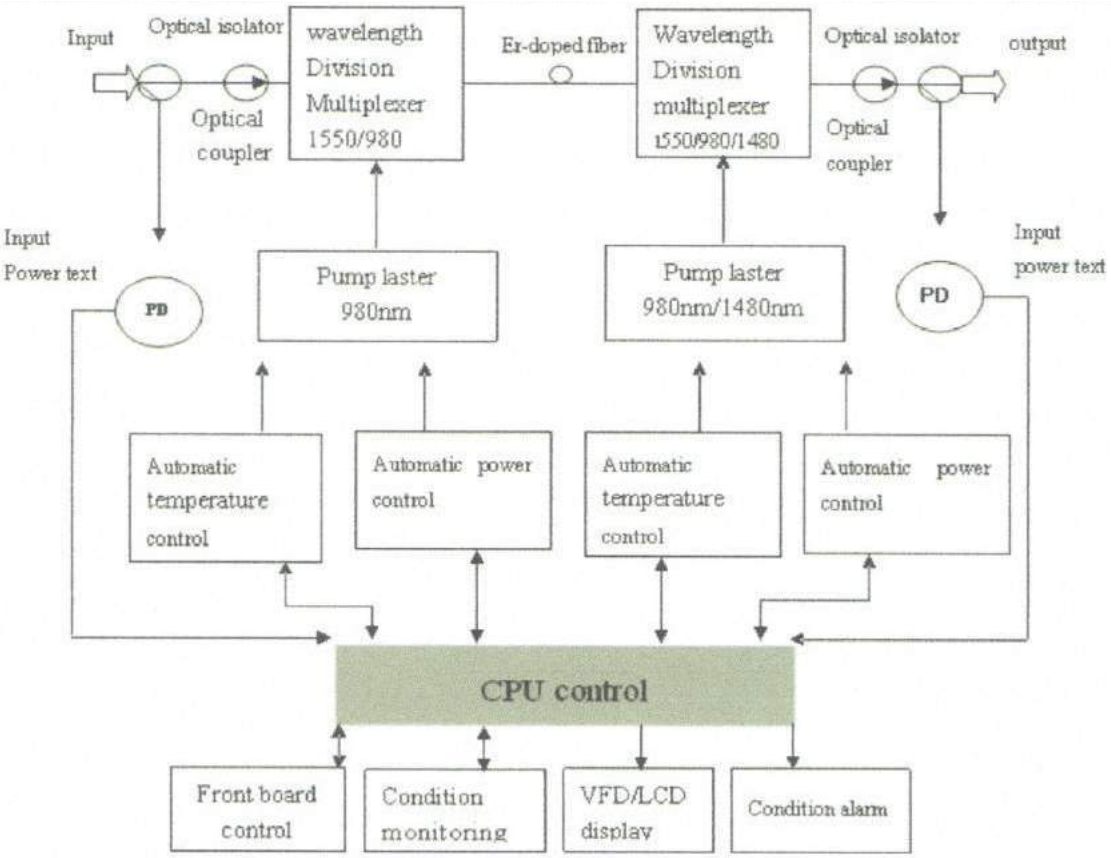

Diagram of erbium-doped fiber amplifier

3.0Technical Data

Item	Unit	Techncial Data
Rated output power	dBm	13～26
Input Power	dBm	-10～+10
The maximum adjustable power down	dBm	5，Step 0.1
Adjustable maximum power up	dBm	0.5
Wavelength	nm	1535～1565
Output optical power stability	dB	±0.1
Noise factor	dB	≤5.0（0dBmInput）
Polarization sensitivity	dB	<0.3
Polarization mode dispersion	PS	<0.5
Input optical return loss	dB	>55
Output optical return loss	dB	>45
Pump leakage power	dB	≤-30
Optical connector		SC/APC 或 FC/APC
C/N	dB	≥52
C/CSO	dB	≥65
C/CTB	dB	≥65

Note: The test link and conditions GY / T 184-2002

4.0Operation Menu

1)Parameter display from menu contents:

Power IN: Input Optical Power

OpticOut: Output Power

BIAS-A: A pump laser bias current

BISA-B: bias current of laser pump B (single pump does not exist)

Cool-A: A cooling laser pump current

Cool-B: B cooling laser pump current (single pump does not exist)

LD1 Temp: A laser pump temperature

LD2 Temp: temperature laser pump B (single pump does not exist)

2) Set menu content:

Set menu content:

Run Mode: working mode, AFC, APC, AGC switch

Least IN: pump threshold

PowerSet: output power setting

BIAS-A: gate bias current protection A laser pumping limits

BIAS-B: B-pumped laser bias current protection threshold (single pump does not exist)

Transmitter Model

1.0 Model Description

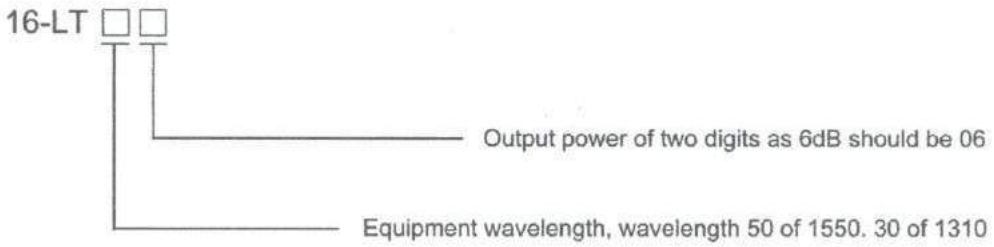

2.0 Diagram

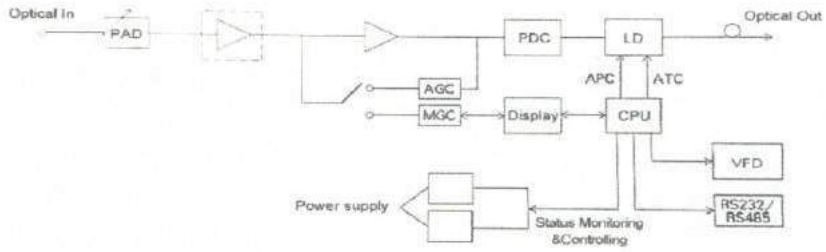

3.0 Technical Data

Project	unit	Technical Data									
Output power	mw	4	6	8	10	12	14	16	18	20	22
Wavelength	nm	1310±20 or 1550±20									
Laser		DFB laser									
Light Modulation		Direct light intensity modulation									
Optical connector		SC/APC or SC/UPC									
bandwidth	MHz	47 ～ 1000MHz									
EF Input Level	dBμV	70 ～ 90 （better80dBμV）									
Flatness	dB	±0.75									
Monitoring port level	dBμV	-10 （Input）									
Inputs isolation	dB	≥50 (Local port to broadcast port)									
AGC Accuracy	dB	0.25									
MGC adjustment range	dB	0 ～ 15									
RF input impedance	Ω	75									
Input Return Loss	dB	≥16									
C/CTB	dB	≥65									
C/CSO	dB	≥60									
CNR(C/N)	dB	≥51									

Note: The above technical parameters are in accordance with the technical requirements and methods of measurement GY / T 143-2000 predetermined measured.

4.0 Menu Operation

1, parameter display menu contents:
Level IN: input signal level
OMI Set: modulation level setting
LaserOut: output power
BiasCurr: bias current
ChipTemp: die temperature
CoolCurr: cooling current
Module: module temperature

2, set menu content:
ContMode: work mode, AGC, MGC switch
OMI Set: modulation level
PowerSet: power setting
LevelSet: level setting
RF ATT: Attenuation amount
SUB ATT: Attenuation roads

3. Installation and debugging

• Before unpacking the device make sure the packaging is intact; if found damaged packaging or water marks, please contact your local dealer or carrier.

• Make tank inventory verification equipment and accessories in accordance with the packing list after unpacking, any questions please immediately contact your local dealer or call the company directly.

• If you believe the device is damaged, do not energized, so as to avoid more severe damage to the equipment, or accidental injury to operating personnel after unpacking; and immediately contact your local dealer or call the company directly.

4.Maintenance and Troubleshooting

This equipment has been tested at the factory careful commissioning, please check the following table when the control is not working properly, if found indeed machine malfunctions, please contact our sales department or sales department, not the boot to repair, otherwise the user will void your warranty rights, the whole no warranty.

Breakdown	Cause	Solution
After the device powered on, the front panel display and lights are off.	Switching power supply does not start normally,	Replace Power supply
After the device is powered, the switching power supply normally starts but no display on the front panel display.	The control unit is connected with the display data cable is loose, not a good contact.	After the light off the platform, the display leads to a plug in the control unit of this data lines and re-seated and then power can be.
RJ45 network cable network after the access barrier, a network connection is not on.	Transponder IP address and IP address of the computer is not connected to a network segment.	Read the instructions carefully NMS NMS transponder will change the IP address and computer IP addresses in a network without IP address conflicts can be.